hearthstone

Heritage

(Model 8021)

Non-Catalytic Wood Stove

OWNER'S MANUAL

INSTALLATION & OPERATING INSTRUCTIONS

We recommend that our products be installed and serviced by professionals who are certified in the U.S. by NFI (National Fireplace Institute).
www.nficertified.org

PLEASE READ THIS ENTIRE OWNER'S MANUAL BEFORE YOU INSTALL AND USE YOUR NEW HERITAGE WOOD STOVE. To reduce the risk of fire, follow the installation instructions. Failure to follow these instructions may result in property damage, bodily injury, or even death.

SAVE THESE INSTRUCTIONS FOR FUTURE REFERENCE!

CONTACT LOCAL AUTHORITIES HAVING JURISDICTION (BUILDING DEPARTMENT or FIRE OFFICIALS) ABOUT PERMITS REQUIRED, RESTRICTIONS AND INSTALLATION INSPECTION IN YOUR AREA

Heritage Model 8021
Manual: 6400-40444
R: 09/22/13

Intentionally Blank

Table of Contents

INTRODUCTION **4**

SAFETY & GOOD PRACTICES **5**

- CODES 5
- PERIODIC CHECKLIST 6
- THERMO-CERAMIC BAFFLE SYSTEM 6
- EMERGENCY PROCEDURES 6

SPECIFICATIONS **7**

INSTALLATION **8**

- UNPACKING 8
- INSTALLING YOUR STOVE 8
- CLEARANCES TO NFPA 211 PROTECTED SURFACES 8
- HEARTH REQUIREMENTS AND FLOOR PROTECTION 8
- HANDLE ASSEMBY AND OPERATION 9
- OUTSIDE AIR SUPPLY 9
- CLEARANCES TO COMBUSTIBLES 10

VENTING COMPONENTS AND CONFIGURATION **12**

- COMPONENTS OF A VENTING SYSTEM 12
- INSTALLING A VENTING SYSTEM 12
- CONNECTING YOUR WOOD STOVE 13
- INSTALLING IN A MOBILE HOME 17

OPERATION **18**

- CONTROLS AND FEATURES 18
- CHOOSING FIREWOOD 19
- WOOD HEAT VALUE 19
- BUILDING A FIRE 20
- NORMAL OPERATION 21
- REMOVAL AND DISPOSAL OF ASHES 22

MAINTENANCE **23**

- MONITORING STOVE TEMPERATURES 23
- CREOSOTE FORMATION AND NEED FOR REMOVAL 23
- GASKETS 23
- GLASS 23
- STONE 24
- CAST IRON 25

TROUBLESHOOTING **26**

- TROUBLESHOOTING GUIDE 27

REPLACEMENT PARTS & OPTIONAL ACCESSORIES **28**

SAFETY & RATING LABEL **29**

WARRANTY REGISTRATION **30**

Introduction

Congratulations! You have just invested in a most unique wood burning stove – the Heritage Wood Burning Stove from Hearthstone Quality Home Heating Products, Inc®. The Heritage Model 8021/8021EP is a clean burning, EPA certified, non-catalytic wood burning stove. With a 2.2 cubic foot firebox capacity and 2.6 grams per hour particulate emission, you can be proud to join the Hearthstone family with our *Premier* Soapstone Wood Burning Stove. The front and the side doors, along with the generous depth allow for loading of wood up to 21 inches long!

Your purchase ensures years of clean, comfortable heat with minimal maintenance. You will receive the benefits of the most advanced technology in wood burning without the cost and maintenance requirements of a catalytic stove. The Heritage blends modern technology with the unique beauty and heating qualities of soapstone, long known for its even heat production and long heat-retaining ability. We trust that you will appreciate the quality of our handcrafted product.

Please read this manual in its entirety. Its purpose is to familiarize you with your stove's safe installation, proper break-in, operation and maintenance. It contains information that will be useful to you now, and in years to come, so keep it handy and refer to it as needed.

Use these instructions as well as national, state, and local building codes to install your stove. Be sure to maintain the designated stovepipe and stove clearances to walls, ceilings, hearth, and other combustible surfaces. This will help reduce the risk of fire. Failure to follow these instructions can result in property damage, bodily injury, and even death.

Locate your stove in a safe, convenient, open area; away from traffic flow, doors, and hallways; and near a chimney and chimney connector. Review the proper clearance measurements from combustible surfaces. You can safely reduce required clearances in most cases by using the, optional, rear heat shield, and also with a special connector pipe and special wall coverings as specified by this manual, the NFPA 211 codes, and your local authorities having jurisdiction.

Keep furniture, drapes, curtains, wood, paper, and other combustibles far away from the stove. Never install the stove in a location where gasoline, kerosene, charcoal lighter fluid or other flammable liquids are used or stored.

Locate the stove centrally in your living area to allow the heat to travel naturally to distant rooms. We recommend that you do not locate your stove in an un-insulated basement. The amount of radiant energy required to heat concrete basement walls is so great that most of the usable heat is absorbed by them and lost.

- **SAFETY NOTICE: A HOUSE FIRE MAY RESULT IF THIS STOVE IS NOT INSTALLED PROPERLY. FOR YOUR SAFETY, CAREFULLY FOLLOW THE INSTALLATION DIRECTIONS. CONTACT LOCAL BUILDING OR FIRE OFFICIALS ABOUT RESTRICTIONS AND INSTALLATION INSPECTION IN YOUR AREA.**

The performance of your stove depends on many variables. Since all installations are unique, the general information and operating procedures presented here can only serve as useful guidelines rather than hard and fast rules. Should you have any questions, do not hesitate to contact your dealer for additional information.

This stove is manufactured and warranted by:

Hearthstone *Quality Home Heating Products Inc*®
317 Stafford Ave.
Morrisville, Vermont 05661
inquiry@hearthstonestoves.com
www.hearthstonestoves.com

Safety Information

Read and understand this Owner's Manual thoroughly before installing and using this stove.

CODES

When you install your Heritage wood stove, it is imperative that you adhere to all local codes, which can be obtained from either of the following two National sources:

American National Standards Institute, Inc. (ANSI)
1430 Broadway
New York, NY 10018
www.ansi.org

National Fire Protection Association, Inc. (NFPA)
Battery March Park
Quincy, MA 02269
www.nfpa.org

If you are installing your Heritage in a mobile home, follow the guidelines described in the Manufactured Home Construction and Safety Standard, Title 24 CFR, Part 3280 (United States).

Make sure to install your stove:

- According to the manufacturer's recommendations.
- In accordance with all applicable codes.
- With the proper sized chimney.

When using your stove:

- Warn children and others unfamiliar with woodstoves of the danger of touching hot, radiating surfaces of your stove. For your additional safety, obtain hearth and stove guards through your local dealer.
- Follow recommended break-in procedure as outlined in this manual.
- Burn natural wood only. Higher efficiencies and lower emissions result when burning air-dried, seasoned wood, as compared to green or freshly cut wood.
- Use caution when loading firewood into a hot stove.
- Keep the side and front doors closed at all times except when loading wood.
- Keep the ash pan tray fully inserted and the ash door closed tightly.
- Inspect the stovepipe, chimney connector and chimney, as recommended.

Follow these safety precautions:

- **Never** modify this stove in any way, especially the primary air control system.
- **Never** burn kiln dried wood, painted or treated wood, solvents, trash, plywood, colored or glossy paper, artificial logs, cardboard, coal, garbage or driftwood. *Especially, do not burn coal in this stove.*
- **Never** use gasoline type fuel, kerosene, charcoal lighter fluid, or other liquid fuels or solid fire starters to start or invigorate the fire. These fuels can possibly generate carbon monoxide, which can deplete the supply of oxygen. Keep all such materials away from the stove.
- **Never** use the stove if the ash pan door is open, damaged, not in place, or not sealing.
- **Never** use a wood grate or other device to elevate the fire.
- **Do Not** allow wood to rest against or otherwise come in contact with the glass when the door is closed.
- **Do Not** slam the door or use the door to force wood in to the stove.
- **Never** over-fire your stove. (See page 22)
- **Never** put articles of clothing or candles on a hot stove.
- **Do Not** connect the stove to a flue that is serves another appliance.

Other safety guidelines

- As a general rule, keep all movable combustible items such as furniture, drapes, clothing, and other items, at least 36" (0.92 m) from the stove.
- Install a good smoke detector, preferably in an area away from your wood stove.
- Keep a fire extinguisher handy. We recommend the type rated "A B C."
- Dispose of ashes properly. (See page 22)
- Keep children and pets away from the stove; they could be burned by touching a hot stove.
- Clean your chimney system as needed. (See page 23)

PERIODIC CHECKLIST

Perform each of these tasks at the specified intervals.

At the End of Every Week:

- Empty ashes from the firebox and ash pan, sooner if the firebox or the ash pan begins to fill up.

At the Beginning of Every Other Month:

- A visual inspection of the chimney connector and chimney for creosote is recommended depending upon your use of the stove. (Please see page 23 - Creosote Formation and Need For Removal)
- Check door seals using the "dollar bill test." - When the fire is out and the stove is cool, shut the door on a dollar bill. If the bill pulls out without any resistance, then your stove's door isn't sealed properly. To tighten the seal, change the door gasket. (Refer to page 23.)

At the End of Every Season:

- Dismantle the chimney connector and clean it thoroughly. Replace any pieces that show signs of rust or deterioration.
- Inspect and, if necessary, clean your chimney.
- Thoroughly clean out the inside of the stove.
- Inspect all door gasket material and replace if worn, frayed, cracked or extremely hard.

THERMO-CERAMIC BAFFLE SYSTEM

To enhance the combustion efficiency and reduce the emissions of the fire in your stove Hearthstone has developed an advanced THERMO-CERAMIC baffle system. This system uses a lightweight, durable ceramic material above the burner tubes to maintain the high temperatures in the secondary combustion area and maintain the low emission – high efficiency combustion you desire. This new technology will not corrode, rust dissolve or lose its strength, however it is vulnerable to puncture or cracking due to rough handling.

- **PLEASE EXERCISE CARE WHEN LOADING WOOD OR CLEANING YOUR STOVE, NOT TO DAMAGE THE THERMO-CERAMIC BAFFLE**

Located directly above the burner tubes in the firebox, this white or grey sheet of ceramic material will break if wood or cleaning brushes impact it. Be careful when loading and cleaning your stove to not break this material. If this piece is fractured or a hole is punctured, the stove will function improperly. You must order a replacement baffle kit through a qualified Hearthstone dealer.

EMERGENCY PROCEDURES

If you have a stovepipe or chimney fire, follow these instructions:

1. Call the fire department – immediately!
2. If the fire is too threatening, leave the area and wait for the fire department. If not, perform the next three steps.
3. Close the primary air control. (see page 18)
4. Close the stovepipe damper (if present).
5. Keep the stove front, and ash doors closed!

- **WARNING: DO NOT ATTEMPT TO PUT OUT A STOVEPIPE OR CHIMNEY FIRE BY THROWING WATER ONTO THE STOVE, STOVEPIPE, OR CHIMNEY. THE EXTREMELY HIGH TEMPERATURE ASSOCIATED WITH SUCH FIRES CAN CAUSE INSTANTANEOUS STEAM AND SERIOUS BODILY HARM.**

Once the chimney fire expires, leave the primary air control closed and let the fire in the stove die out completely. Do not fire the stove again until the stove, stovepipe, and chimney are all thoroughly inspected for any sign of damage. You must correct any damage before using your stove again.

Specifications

Maximum Heat Output: 55,000 BTUs per hour of cordwood (based on independent laboratory test results).

Size of Heated Area: 1,500 to 2,000 square feet.

Firebox Capacity: 2.2 cubic feet (.062 cubic meters) or 46 pounds of wood (The amount and weight of wood contained per cubic foot of firebox volume can vary from 15 to 36 lbs. per cubic foot depending on type of wood, moisture content, packing density and other factors. As a constant for comparison and test purposes, we are assuming 20 lbs. of seasoned hardwood per cubic foot of firebox volume).

Maximum Log Length: 21" (53cm) - Front and Side doors

Stove Dimensions:

Height 28 7/8" (73.3 cm)
Width 29" (73.5 cm)
Depth 21 1/4" (54 cm)

Front Door Size: 18" wide x 11" high (46 x 28 cm)

Side Door Size: 9.5" wide x 10" high (24 x 25.4 cm)

Stovepipe Size: 6" (152 mm) diameter

Metal Chimney: 6" (152 mm) inside diameter

Masonry Chimney: 6" (15.2cm) inside diameter (round flue) 8" x 8" (20 x 20cm) (square flue)

Flue Exit: Top or Rear

Actual Weight: 475 (216 kg) pounds

Crate Dimensions: H-38" (97cm) W-32" (81 cm) L-32" (81 cm)

Optional Equipment: Rear Heat Shield: 90-68210

Outside Air Kit: 90-53210

Blower: 90-57210

Soapstone Finish[1] Polished Gray Soapstone

Castings Finish Painted Matte; and Porcelain Enamel (Brown, Sea-foam, Blue-black and Black)

[1]Polished gray soapstone is a natural product and will vary from stone to stone. Various amounts of gray, charcoal, blue and green will be evident according to the natural composition of the stone.

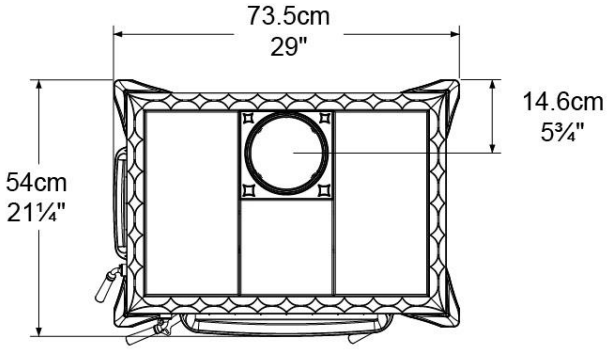

Figure 1 – Top View

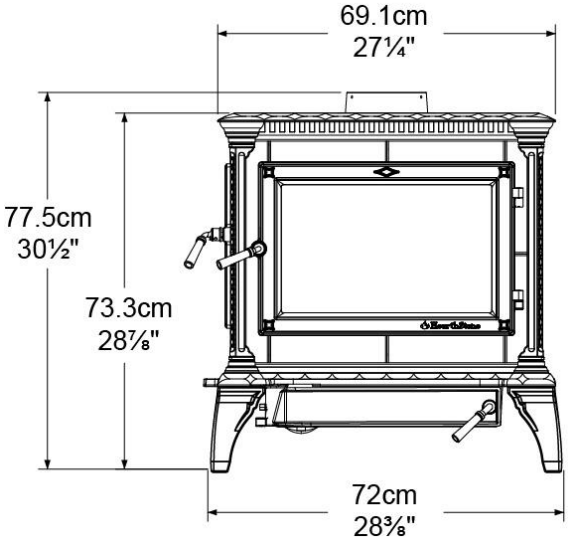

Figure 2 – Front View

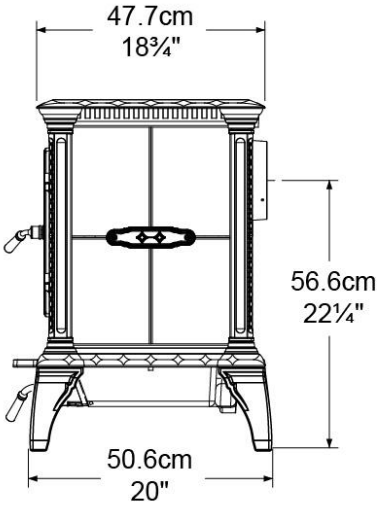

Figure 3 – Side View (Rear Flue Exit)

Installation

UNPACKING

Hearthstone Stoves packages your Heritage stove with the greatest care, so that it ships safely. Under certain circumstances, however, damage can occur during transit and handling. When you receive your stove, unpack it carefully, inspecting your stove and all parts for damage. Also, make sure that all parts are included. If any parts are damaged or missing, please contact your dealer immediately.

Read this chapter to obtain a sound understanding of how to properly install your stove.

INSTALLING YOUR STOVE

First, you must decide where your stove will reside. After choosing an appropriate spot, inspect this location to make sure that the stove will have enough clearance to combustible materials that would surround the stove. These combustibles can include walls, floor, ceiling, fireplace, and chimney. You must carefully consider the clearances to all of these combustibles before actually connecting your stove. When considering these clearances, also decide the kind of floor the stove will rest on. The Heritage 8021 must be installed on a non-combustible surface, use floor protection if necessary.

Use this chapter to plan how to install your stove in your particular location. Consider both the clearances of the stovepipe and the stove itself to the surrounding combustibles. Also consider access to the side door.

If you use a close clearance connector pipe, it must be tested to UL standards and listed. Check the listing of <u>your</u> pipe for actual clearances. The diagrams in this manual represent typical installations, but are specific to the Simpson Dura-Vent DVL brand. Clearances cannot be reduced without the use of close clearance connector pipe and/or by protecting the surfaces per NFPA 211 standards.

Locate the stove centrally in your living area to allow the heat to travel naturally to distant rooms. It is not recommended that you locate your stove in an un-insulated basement. The amount of radiant energy required to heat concrete basement walls is so great that most of the usable heat is absorbed by them and lost.

Clearances to NFPA 211 Protected Surfaces

You can reduce the clearances to combustible surfaces by using any National Fire Protection Agency (NFPA) approved wall protection system. Please refer to NFPA 211 for specifications and complete details. You can obtain this information directly from NFPA.

National Fire Protection Agency
Batterymarch Park
Quincy, MA 02269
1-800-344-3555 or 1-617-770-3000
www.nfpa.org

HEARTH REQUIREMENTS AND FLOOR PROTECTION

Combustible flooring must be protected with a covering of noncombustible material (slate, marble tiles, or other noncombustible material can be used for this purpose). The floor protection must extend beyond **<u>the body</u>** of the stove at the minimum as follows:

- LEFT SIDE 16” (41 cm)*
- RIGHT SIDE 5” (13 cm)
- REAR 2” (5 cm)**
- FRONT 16” (41 cm)*

* Installations in Canada require 18” (46 cm) of floor protection on the left side <u>and</u> front.
** Rear clearance required only if stovepipe runs horizontally back from the top or rear of the stove.

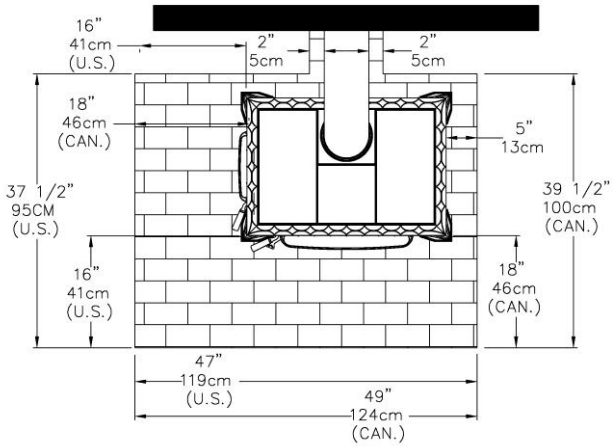

Figure 4 – Hearth Pad Dimensions

Note: Dimensions shown in figure above are measured from the **<u>body</u>** of the stove, not the legs.

Minimum hearth pad dimensions can be reduced by installing the Side Door Lock Kit (Kit 90-70210). **(Minimum hearth pad width with the lock kit is 34”).**

Handle Assembly

Locate the handle, bolt, and washers enclosed in the envelope with the owner’s manual. Place the washers on the bolt and then push it through the handle so that the bolt threads extend through the bottom of the handle. Use a slotted screwdriver to turn the bolt into the chromed handle crank on the door until it is snug.

Handle Operation

Front Door – when closed, the handle is in the 7 o’clock position. To open the front door, rotate the latch clockwise to approximately the 10 o’clock position.
Ash Pan Door – when closed, the handle is in the 9 o’clock position. To open the ash door, rotate the latch counter-clockwise to approximately the 7’clock position.
Side Door – when closed, the handle is in the 5 o’clock position. To open the side door, rotate the latch counter-clockwise, to approximately the 2 o’clock position.

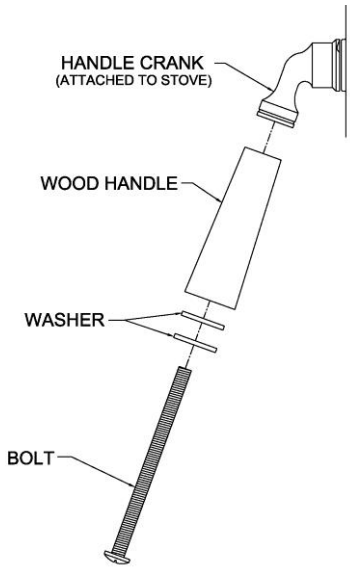

Figure 5 – Wooden Handle Detail

OUTSIDE AIR SUPPLY

(Kit #90-53210)

An outside air source may be connected directly to this stove using an optional outside air kit. The advantage of providing outside air directly to the stove is that the air used by the stove for combustion is taken from outside of the residence rather than from within the room where the stove is located. With outside air supplied directly to the stove, drafts within the room and air infiltration within the building are reduced. Use of the outside air kit may also improve stove performance in a particularly air-tight house.

The outside air kit for this stove allows for the direct connection of the stove's air intake to a minimum 3" (76 mm) diameter duct (supplied by others) which leads to the outside of the house. When considering placement of the duct from the outside of the house to the hearth, keep in mind the need to avoid structural members of the house.

Locate the termination of the duct on the outside wall of the structure in such a manner so as to preclude the possibility of obstruction by snow, leaves or other material. Screen the opening against animals and insects (any screen, duct, clamps, and hood supplied by others).

CLEARANCES TO COMBUSTIBLES

You must follow minimum clearances for the Heritage stove to combustibles such as walls and ceilings. You may reduce the general clearances if installing the stove near *Protected Surfaces.*

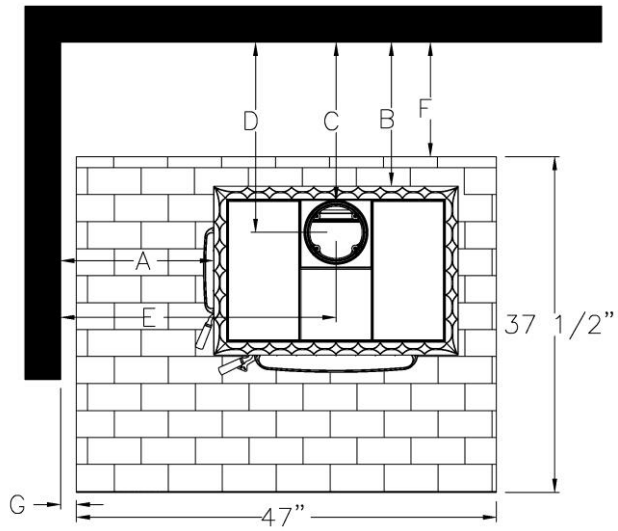

Figure 6 – Parallel Clearances*

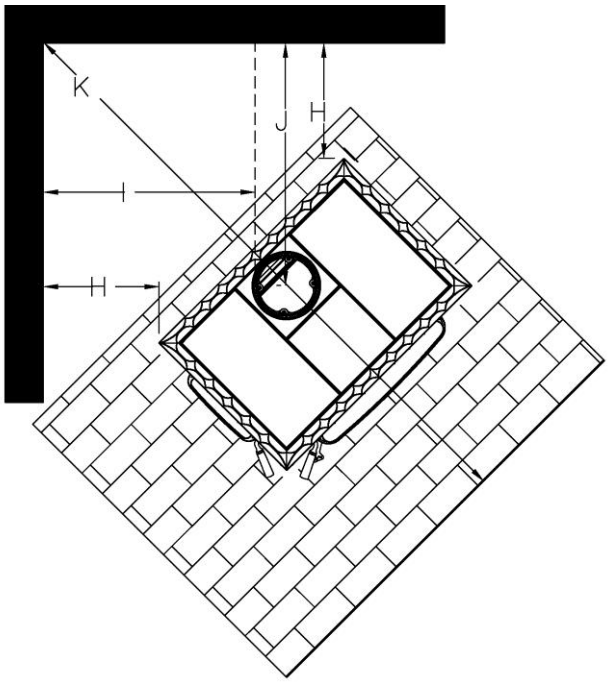

Figure 7 – Corner Clearances

	Parallel							Corner			
Clearances (inches)	**A**	**B**	**C**	**D**	**E**	**F**	**G**	**H**	**I**	**J**	**K**
Single wall stove pipe without heat shield	17	16	18	21	30.5	13	2	12	22	25.5	65
Single wall stove pipe with heat shield	17	10	12	15	30.5	7	2	12	22	25.5	65
Double wall stove pipe with heat shield	15	7	9	12	29	4	0	11	21	24.5	63.5

Alcove Clearances (inches)	Unprotected Surfaces	Protected Surfaces (NFPA-211)
Minimum alcove width	61	49
Maximum alcove depth	48	48
Alcove ceiling above stove top	57	24

If you use a rear heat shield to obtain reduced clearances, you must use the optional rear heat shield manufactured by Hearthstone available through your local dealer. Close clearance connector pipe must be tested to UL standards and listed. Check listings of your pipe for actual clearances. Shown are measurements typical only and specific to Simpson Dura Vent DVL brand. Clearances cannot be reduced without the use of the rear heat shield and/or with close clearance connector pipe and/or by protecting the surfaces per NFPA 211 standards

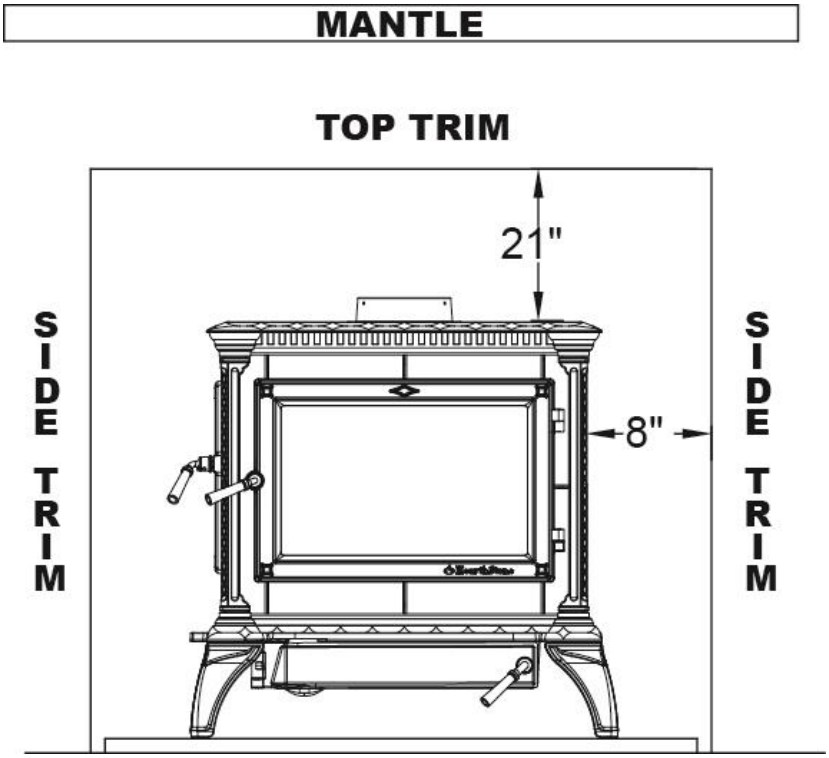

Figure 8 – Mantle Clearances (Front View)

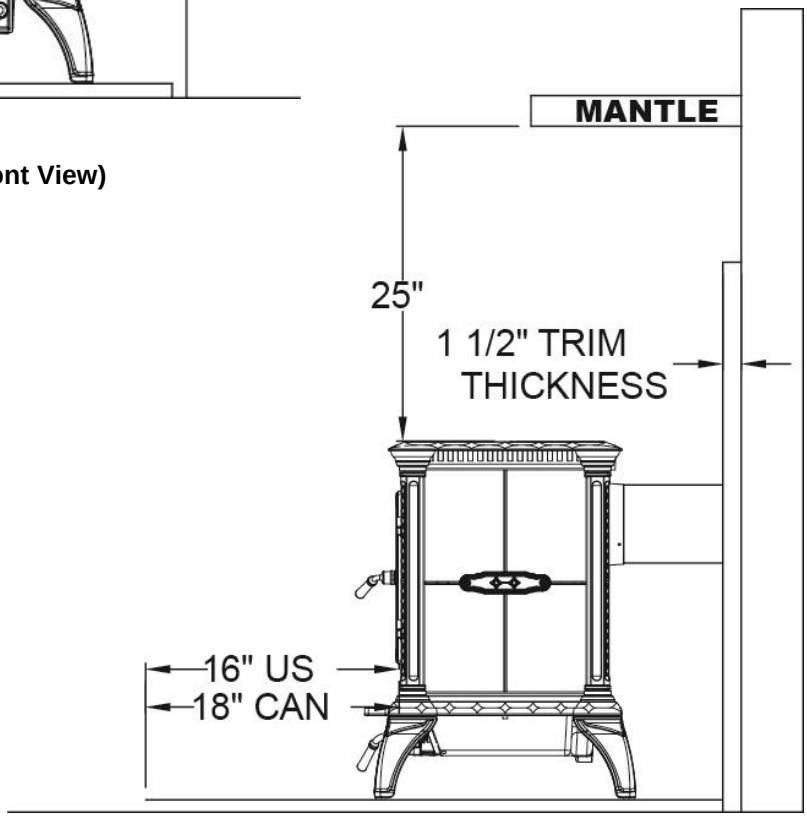

Figure 9 – Mantle Clearances (Side View)

Venting Components and Configuration

CONVERTING TO REAR VENT

In order to convert the Heritage from a top to rear or vice-versa, reach through the flue collar and remove the four ¼-20 hex head screws that mount the cover plate. Next, reach through the hole whole the cover plate was and remove the four ¼-20 hex head screws that mount the flue collar. Exchange the two pieces and reattach the eight screws.

DO NOT CONNECT THIS UNIT TO A CHIMNEY FLUE SERVING ANOTHER APPLIANCE

- Single wall connector is 24 MSG or 25 MSG blued steel stovepipe.
- Double wall connector (close clearance pipe) which must be used with a listed factory-built "Type HT" chimney also may be used with a masonry chimney to reduce clearances, is available from several manufacturers, your dealer can help you choose. Some air insulated connector pipe models available are Simpson Dura Vent DVL and Metalbestos DS. Security, GSW and Ameritec also have acceptable close clearance connector pipe.
- When used in a mobile home, a spark arrester is required. (See page 17)
- Chimney connector shall not pass through floor or ceiling, nor any attic or roof space, closet or similar concealed space. Where passage through a wall or partition of combustible construction is desired, the installation shall conform to NFPA 211 or CAN/CSA - B365.

It is very important to follow minimum clearances for chimney connectors to combustibles such as walls and ceilings when installing the stove near non-combustible surfaces. Typical chimney connector clearances are outlined below. The single wall clearances are generic; the Double wall clearances are for Simpson Dura Vent DVL.

- **ALWAYS CHECK THE CLEARANCE SPECIFICATIONS FROM THE MANUFACTURER OF YOUR CONNECTOR PIPE**
- **DO NOT CONNECT THE VENT TO ANY AIR DISTRIBUTION DUCT OR AIR HANDLING SYSTEM.**

COMPONENTS OF A VENTING SYSTEM

The complete venting system consists of several components: chimney connector, wall thimble, wall pass-through, chimney, and liner. It is *absolutely necessary* that you install all of these components within the clearances to combustibles discussed earlier to install your stove safely.

To protect against the possibility of a house fire, you *must properly install and constantly maintain the venting system*. Upon inspection, immediately replace rusted, cracked, or broken components.

- The *chimney connector* is the stovepipe from the woodstove to the chimney. The chimney connector stovepipe must be 6" (152 mm) diameter, 24 MSG or 25 MSG blued steel connector pipe. *Do not use aluminum or galvanized steel pipe* - they cannot withstand the extreme temperatures of a wood fire.
- A *thimble* is a manufactured (or site-constructed) device installed in combustible walls through which the chimney connector passes to the chimney. It keeps the walls from igniting. You must use a wall thimble when installing a chimney connector through a combustible wall to the chimney.
- A *wall pass-through* (or chimney support package) also keeps the walls from igniting. You must use one when connecting through a wall or ceiling to a prefabricated chimney.
- Only install this stove to a *lined masonry chimney* or an approved high temperature *prefabricated residential* type building heating appliance chimney. *Do not* connect this stove to a chimney serving another appliance; you will compromise the safe operation of both the wood stove and the connected appliance.
- **WARNING: DO NOT CONNECT THIS APPLIANCE TO ANY AIR DISTRIBUTION DUCT OR SYSTEM.**
- A *liner* is the UL 1777 or ULC S635 (for factory built fireplace or masonry) chimney.

You must connect your stove to a chimney comparable to those recommended in this manual. *Do not use stovepipe as a chimney*. Use stovepipe for freestanding installations only to connect the stove to a proper chimney.

INSTALLING A VENTING SYSTEM

Stovepipe sections must be attached to the stove and to each other with the crimped end toward the stove. If creosote builds up, this allows the creosote to run into the stove and not the outside of the stovepipe and onto the stove.

Secure all joints, including attaching the stovepipe to the stove's flue collar, with three sheet metal screws. Install #10 x 1/2" (3 mm x 13 mm) sheet metal screws into the holes pre-drilled in the flue collar. Leaving off

the screws can cause joints to separate from the vibration that results from a creosote chimney fire.

You can simplify connecting stovepipe by using additional accessories such as telescoping pipes, slip-connectors or clean-out tees. These accessories ease the inspection of your chimney, as well as allow you to easily dismantle the stovepipe (without moving the stove) when you periodically inspection the stovepipe connection and chimney.

Install the stove as close as practical to the chimney while maintaining all proper clearances. Install stovepipe that is as short and as straight as possible. Horizontal runs of stovepipe should always rise away from the stove a minimum of 1/4" per foot (21mm/m).

Long runs of stovepipe to increase heat dispersal are not recommended. Using longer lengths of stovepipe or more connecting elbows than necessary increases the chance of draft resistance and the accumulation of creosote buildup.

In general, you do not need to install a stovepipe damper with the Heritage. Some installations, however, could benefit from a stovepipe damper, such as a tall chimney which can create a higher than normal draft. In such cases, a damper can help regulate the draft. The Heritage requires a draft between 0.06" wc and 0.1" wc. For drafts above 0.1" wc, install a stovepipe damper.

Remember, the NFPA has recommended minimum clearances for chimney connectors to combustibles such as walls and ceilings. Once the stove is installed at safe distances from these combustible surfaces, it is important to maintain these connector clearances for the remainder of the installation.

CONNECTING YOUR WOOD STOVE

You can install your Heritage to a prefabricated metal chimney or a masonry chimney.

Connecting to a Prefabricated Metal Chimney

When connecting the Mansfield to a prefabricated metal chimney, you must follow, precisely, the manufacturer's installation instructions. Use only Type HT (2100 deg. F), prefabricated metal chimneys listed per UL 103 or ULC S629 standards.

- **WARNING: DO NOT CONNECT THE STOVE TO A CHIMNEY FLUE SERVING ANOTHER APPLIANCE.**

Ensure the size of the chimney's flue is appropriate for the Heritage. The Heritage requires a 6" (152 mm) inside diameter flue for new installations. A 6" diameter flue provides adequate draft and performance. You can use an 8" (203 mm) diameter existing flue with a reducer. An oversized flue contributes to creosote accumulation. (In this case, bigger is NOT better.)

When purchasing a prefabricated chimney to install with your stove, be sure to also purchase from the same manufacturer the wall pass-through (or ceiling support package), "T" section package, fire-stops (when needed), insulation shield, roof flashing, chimney cap, and any other needed accessories. Follow the manufacturer's instructions when installing the chimney and accessories. In addition, be sure to maintain all manufacturer's recommendations for the proper clearances to the chimney.

There are basically two ways to install a prefabricated metal chimney:

1. An *interior* installation where the chimney passes inside the residence through the ceiling and roof.
2. An *exterior* installation where the chimney passes through the wall behind the stove then up the outside of the residence.

Whenever possible, choose an interior chimney. An interior chimney heats up more quickly and retains its heat; thus promotes a better draft and discourages the formation of creosote. An exterior chimney does not benefit from the warmth of being surrounded by the building, so it typically operates at lower flue temperatures than an interior chimney. An exterior chimney's draft is not as strong and may experience increased creosote accumulation.

Connection To A Masonry Chimney

Consider two primary elements when connecting your stove to a masonry chimney: the chimney itself and the thimble where the stovepipe connects to the chimney. Use only Code approved masonry chimneys with a flue liner. See figure 12 for instructions on installing a thimble into a masonry chimney or masonry fireplace.

Before connecting to a masonry chimney, hire a professional to examine the chimney for cracks, loose mortar, and other signs of deterioration and blockage. If the chimney needs repair, complete them before installing and using your stove. Do not install your stove until the chimney is safe for use.

Make sure the chimney's cleanout is complete and working properly. To avoid a loss of draft, the cleanout must close off completely. If not, the

chimney will cool, your stove will perform poorly, and creosote will build up in the chimney.

Ensure the size of the chimney's flue is appropriate for this stove and that it is not too large. Use a masonry chimney with an 8" x 8" (203 mm x 203 mm) tile size for best results. An oversized flue will contribute to the accumulation of creosote.

Minimum Requirements:

Use the following checklist to ensure that your masonry chimney meets these minimum requirements:

Chimney wall construction:

- Brick or modular block at least 4" (102 mm) thick.
- A rubble or stone wall at least 12" (305mm) thick.

Flue liner:

- Minimum thickness of 5/8" (16 mm).
- Installed with refractory mortar.
- At least 1" (25 mm) air space.
- An equivalent flue liner must be a listed chimney liner system meeting type HT requirements or other approved material.

Interior chimney requirements:

- At least 2" (51 mm) clearance to combustible structure
- Fire stops must be installed at the spaces where the chimney passes through floors and/or ceiling.
- Insulation must be 2" (51 mm) from the chimney.

Exterior chimney requirements:

- At least 1" (25 mm) clearance to combustible structure.

Chimney height requirements for both prefabricated metal and masonry chimneys: (See Figure 13)

- At least 3 feet (0.9 m) higher than the highest part of the roof opening through which it passes.
- At least 2 feet (0.6 m) higher than any part of the roof within 10 feet (3 m) measured horizontally from the top of the chimney.

This stove requires a minimum chimney height of 13 feet (4 m). The maximum allowable chimney height is 30 feet (9m).

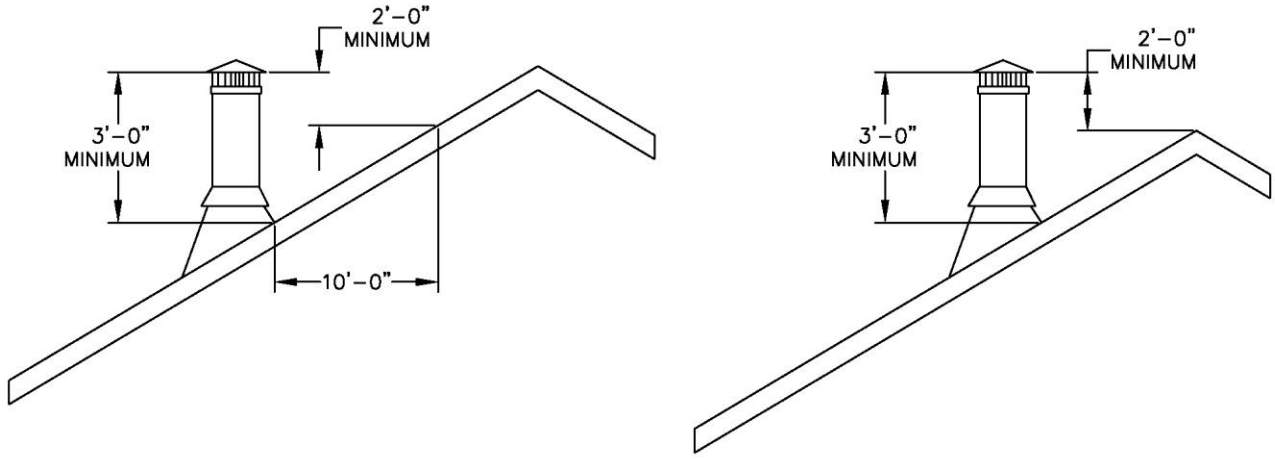

Figure 10 – The 2-3-10 Rule

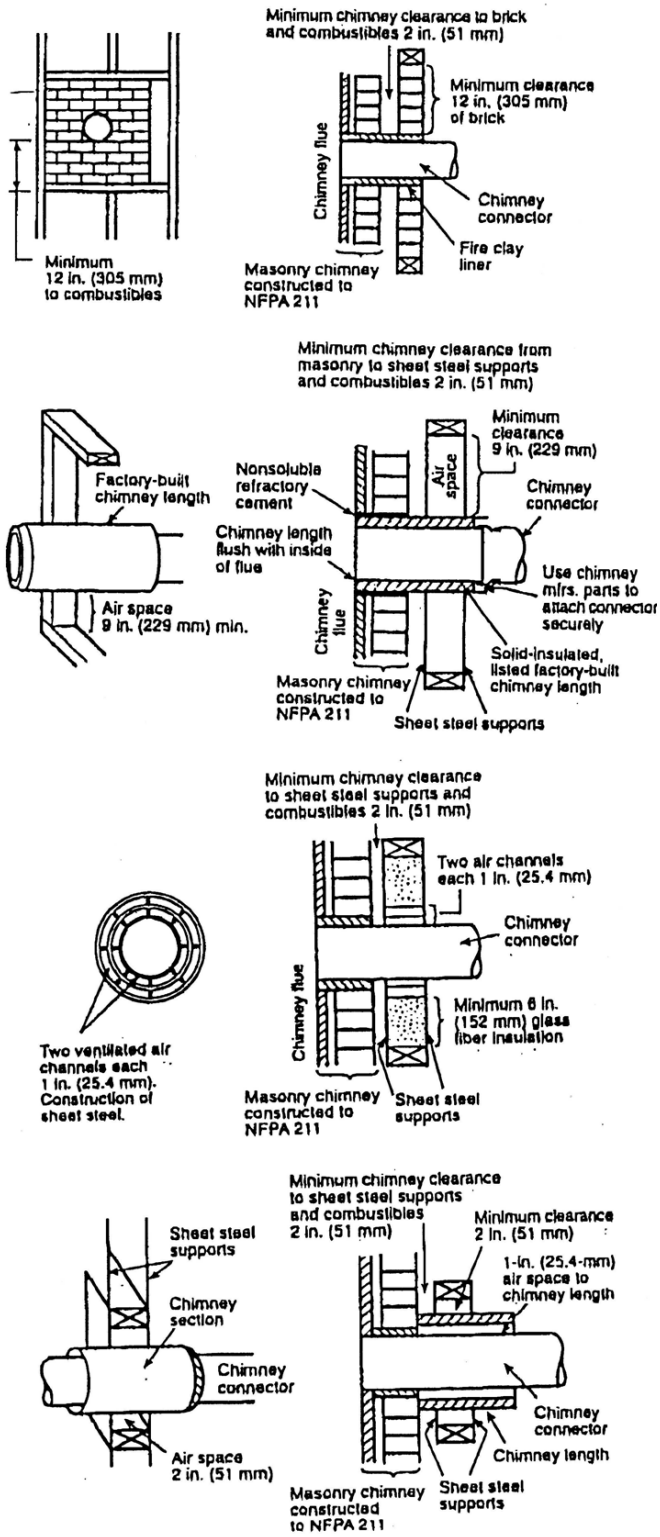

Chimney Connector Systems and Clearances from Combustible Walls for Residential Heating Appliances

A. Minimum 3.5in thick brick masonry all framed into combustible wall with a minimum of 12in. brick separation from clay liner to combustibles. The fire clay liner shall run from outer surface of brick wall to, but not beyond, the inner surface of chimney flue liner and shall be firmly cemented in place.

B. Solid-insulated, listed factory-built chimney length of the same inside diameter as the chimney connector and having 1in. or more of insulation with a minimum 9in. air space between the outer wall of the chimney length and combustibles.

C. Sheet steel chimney connector, minimum 24 gauge in thickness, with a ventilated thimble, minimum 24 gauge in thickness, having two 1in. air channels, separated from combustibles by a minimum of 6in of glass fiber insulation. Opening shall be covered, and thimble supported with a sheet steel support, minimum 24 gauge in thickness.

D. Solid insulated, listed factory-built chimney length with an inside diameter 2in. larger than the chimney connector and having 1in. or more of insulation, serving as a pass-through for a single wall sheet steel chimney connector of minimum 24 gauge thickness, with a minimum 2in. air space between the outer wall of chimney section and combustibles. Minimum length of chimney section shall be 12in. chimney section spaced 1in. away from connector using sheet steel support plates on both ends of chimney section. Opening shall be covered, and chimney section supported on both sides with sheet steel supports securely fastened to wall surfaces of minimum 24 gauge thickness. Fasteners used to secure chimney section shall not penetrate chimney flue liner.

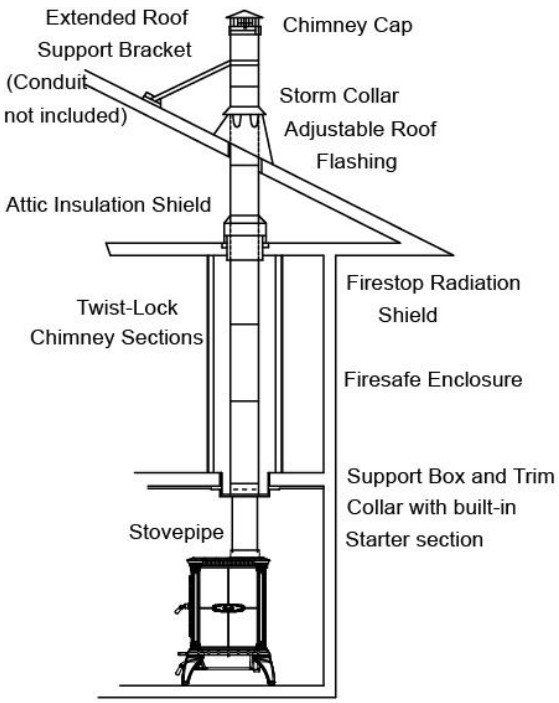

Two story house installation with attic.

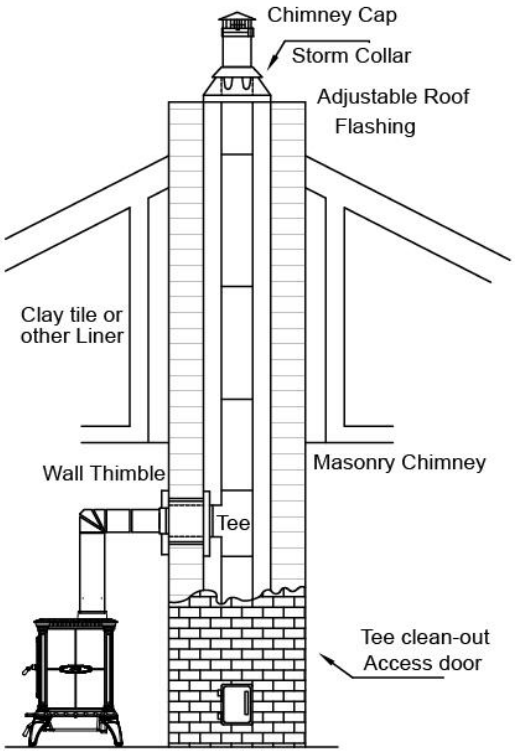

Chimney pipe through Clay tile
or other Lined Masonry Chimney

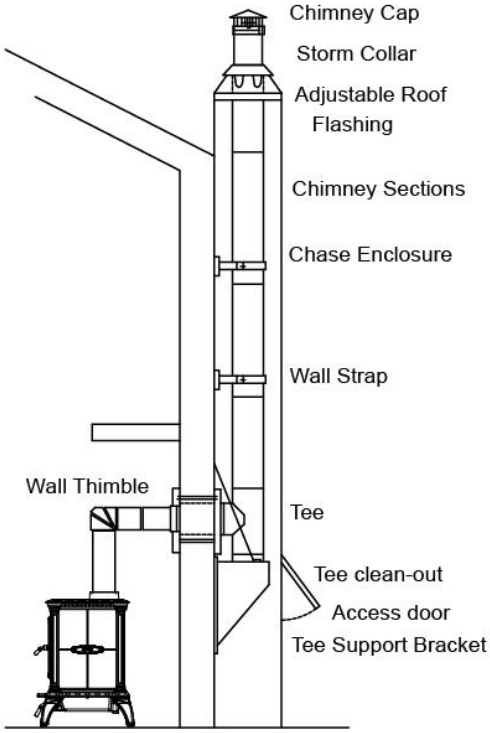

Chimney through outer wall with enclosed chase.
Chimney is supported by Tee Support Bracket.

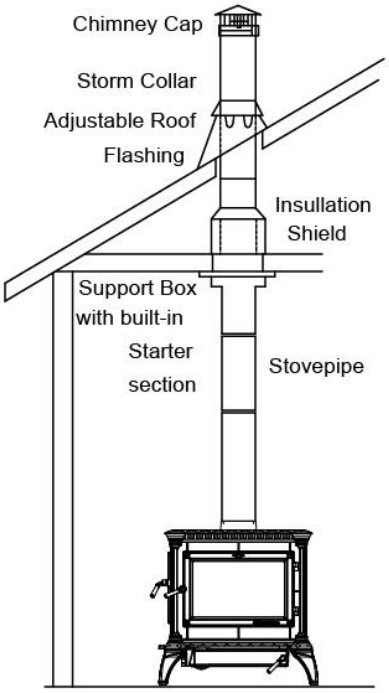

One story house installation with attic.
Chimney is supported by Ceiling.

Figure 11 – Typical Venting Configurations

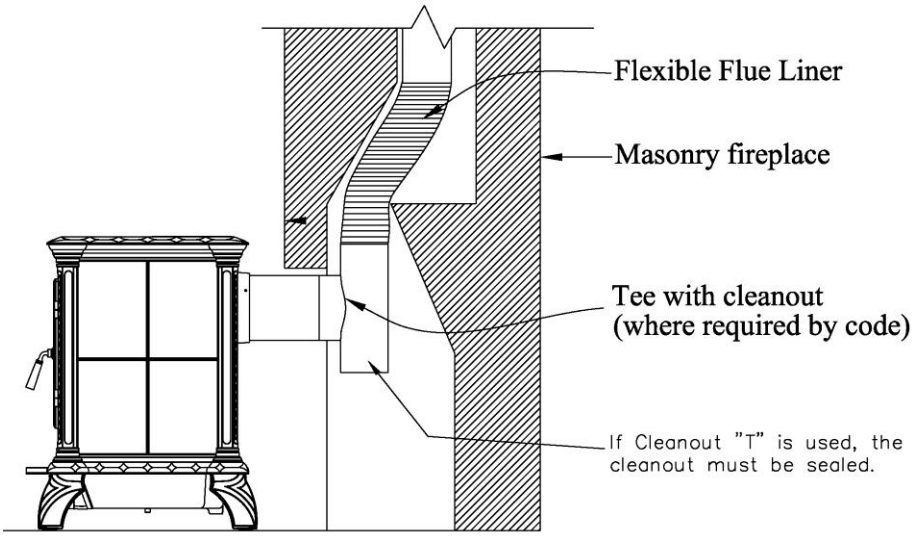

Figure 12 – Fireplace Installation Venting Detail

INSTALLING IN A MOBILE HOME

Follow these special requirements for installing your stove in a mobile home.

- Install the stove in accordance with 24 CFR, Part 3280 (HUD)
- Permanently attach the stove to your mobile home's floor. Use 1/4" holes in each leg base to bolt down the stove.
- Install one of the following Dura-Vent Mobile Home Chimney & Connector Kits:

  6DP-MH 6" Diameter S/N 9096N
  7DP-MH 7" Diameter S/N 9196N
  8DP-MH 8" Diameter S/N 9296N

  Each kit includes:
  Stainless spark arrester cap, storm collar, Adjustable vented flashing – 0/12 – 6/12, Two 24" Dura/Plus* chimney pipes, 24" support box with built-in starter section and trim.

  * (UL or ULC approved equipment is acceptable)

- **EXTERIOR CHIMNEY SECTIONS MUST BE REMOVED WHEN TRANSPORTING MOBILE HOME.**
- **WARNING: DO NOT INSTALL IN A SLEEPING ROOM**
- **CAUTION: MAINTAIN THE STRUCTURAL INTEGRITY OF THE MOBILE HOME WALLS, FLOOR, CEILING, AND ROOF WHILE YOUR STOVE IS INSTALLED AND IN USE.**

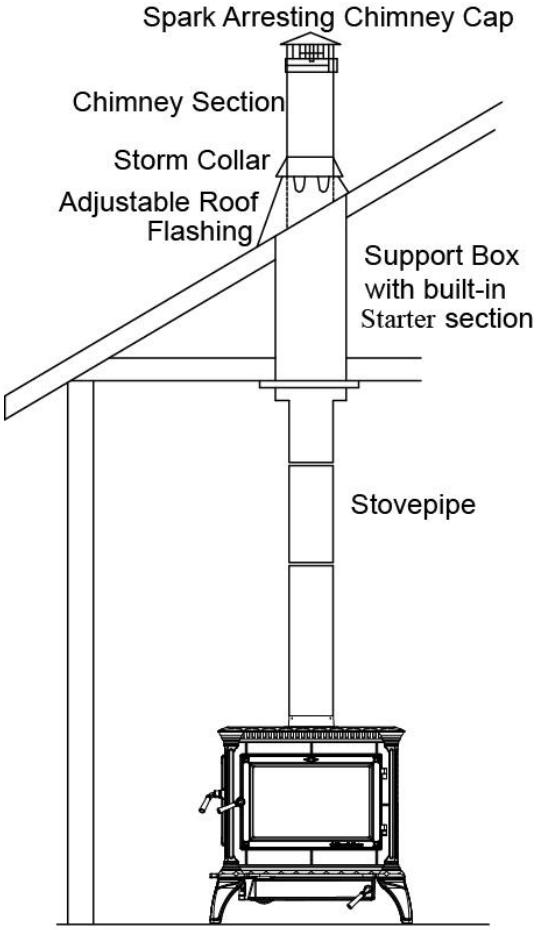

Typical Mobile Home Installation.
Chimney is supported by Ceiling.

Figure 13

Operation

Once your Heritage is set in place, connected, and assembled, you are ready to light a fire. Hearthstone Stoves tests each wood stove before we ship, so you should be able to easily light your first fire.

- **WARNING: HOT WHILE IN OPERATION. KEEP CHILDREN, CLOTHING AND FURNITURE AWAY. CONTACT MAY CAUSE SKIN BURNS.**

Please read this entire chapter before lighting your first fire. It explains the controls and features of your wood stove, how to choose firewood, and how to break-in your stove and use it on a daily basis.

CONTROLS AND FEATURES

Before lighting any fires, become familiar with the location and operation of your stove's controls and features and learn how to use them. For your own safety, do not modify these features in any way.

***FRONT DOOR HANDLE*:** The front door allows you to load wood into your stove; a fixed handle allows you to operate the front door and allows you to latch the front door closed. To open the door, lift the handle to the 10 o'clock position and pull the door. To latch the door, push the door closed tightly then turn the handle to the 7 o'clock position. Pull on the door handle to make sure it is properly latched.

***SIDE DOOR HANDLE*:** The side door allows you to load wood into your stove; a fixed handle allows you to operate the side door and allows you to latch the door closed. To open the door, lift the handle to the 2 o'clock position and pull the door. To latch the door, push the door closed tightly then turn the handle to the 5 o'clock position. Pull on the door to make sure it is properly latched.

***ASH PAN DOOR*:** When closed, the handle will be in the 9 o'clock position. To open the ash door, rotate the latch counter-clockwise to approximately the 7 o'clock position.

PRIMARY AIR CONTROL: The handle is located on the front lower left of the stove, just under the ash lip. The primary air control allows you to regulate the amount of air entering the firebox. Generally, the more air allowed into the firebox, the faster and hotter the rate of burn; conversely, less air creates a slower burn. To fully open the primary air intake, move the handle as far as it will go to the left; move the handle as far as it will go to the right, to close the primary air control.

***ASH PAN*:** The ash pan and ash pan access door is located under the ash lip. To operate the ash grate, simply attach the ash grate control handle (shipped in your owner's manual) to the control slide under the center of the ash lip, with loop facing left. Rotate the handle counter-clockwise until the handle is locked in place. Push the handle in to close the ash grate, Pull the handle out to open the ash grate. To unlock the handle simply rotate clockwise. When the ash door is closed, it will automatically close the ash grate. (Refer to figure below to see the attachment of the ash grate control handle to the control slide.) The ash pan collects burned ash from a fire and allows you to conveniently remove the ash from your wood stove. The firebox should be cleared of ashes periodically by sliding the ash grate towards the front door, sifting the ashes across the grate into the ash pan, then returning the grate to its closed position.

To access the ash pan, turn the ash door handle counter-clockwise, and pull the door open. The ash pan is easy to remove and has a handle for convenient disposal of ashes. Before removing the ash pan, push it (hard!) into the stove, which kicks the ashes further into the pan. To close the ash door, push the door closed and turn the handle clockwise. Note: The ash grate can only be opened when the ash door is ajar or open. The ash grate can be moved back and forth with the shaker grate handle or from the top with a poker.

Do not operate the stove unless the ASH PAN is inserted into the stove and the ash door is closed. This could overheat and damage the stove.

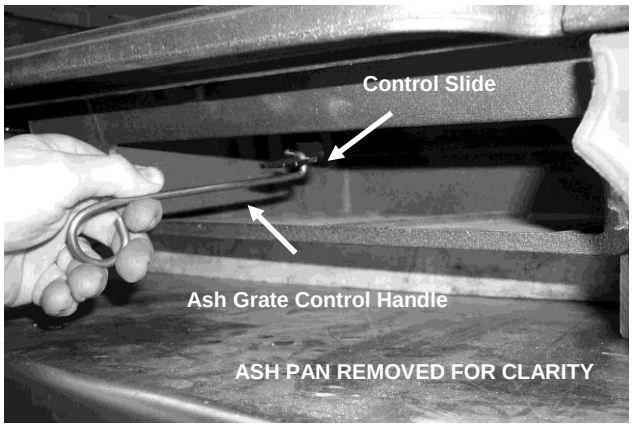

Figure 14 – Ash Grate Operation

CHOOSING FIREWOOD

Burn only natural firewood (known as cordwood) in the Heritage 8021 Woodstove. This stove is not designed to burn other fuels.

- **CAUTION: DO NOT USE CHEMICALS OR FLAMMABLE FLUIDS SUCH AS GASOLINE, NAPHTHA, KEROSENE, CHARCOAL LIGHTER FLUID OR ENGINE OIL TO START A FIRE. DO NOT USE CHARCOAL, PELLETS, COAL, ARTIFICIAL LOGS OR ANY OTHER MATERIALS AS FUEL; THEY ARE NOT SAFE. DO NOT BURN GARBAGE OR FLAMMABLE FLUIDS.**

The quality of your firewood affects heat output, duration of burn and performance of your stove. Softwoods generally burn hotter and faster, while hardwoods burn longer and produce more long lasting coals. Density and moisture content are two critical factors to consider when purchasing wood for your stove.

The following is a list of many common wood species and their relative BTU (British Thermal Unit) content. The higher the BTU content the longer the burn. Firewood with higher a BTU content is generally considered ideal for a wood stove.

WOOD HEAT VALUE

Common Name	Lb/ cord	MBTU/ cord
High		
Osage Orange (Hedge)	4,728	32.9
Hickory, Shagbark	4,327	27.7
Hop Hornbeam (Ironwood)	4,267	27.3
Beech, Blue (Ironwood)	3,890	26.8
Birch, Black	3,890	26.8
Locust, Black	3,890	26.8
Hickory, Bitternut	3,832	26.7
Locust, Honey	3,832	26.7
Apple	4,100	26.5
Mulberry	3,712	25.8
Oak, White	4,012	25.7
Medium High		
Beech, European	3,757	24
Maple, Sugar	3,757	24
Oak, Red	3,757	24
Ash, White	3,689	23.6
Birch, Yellow	3,689	23.6
Medium		
Juniper, Rocky Mtn	3,150	21.8
Elm, Red	3,112	21.6
Coffeetree, Kentucky	3.112	21.6
Hackberry	3,247	20.8
Tamarack	3,247	20.8
Birch, Gray	3,179	20.3
Birch, White (Paper)	3,179	20.3
Walnut, Black	3,192	20.2
Cherry	3,120	20
Ash, Green	2,880	19.9
Cherry, Black	2,880	19.9
Elm, American	3,052	19.5
Elm, White	3,052	19.5
Sycamore	2,808	19.5
Ash, Black	2,992	19.1
Maple, Red	2,924	18.7
Fir, Douglas	2,900	18.1
Medium Low		
Boxelder	2,797	17.9
Alder, Red	2,710	17.2
Pine, Jack	2,669	17.1
Pine, Norway (Red Pine)	2,669	17.1
Pine, Pitch	2,669	17.1
Catalpa	2,360	16.4
Hemlock	2,482	15.9
Spruce, Black	2,482	15.9
Pine, Ponderosa	2,380	15.2
Low		
Aspen, American	2,290	14.7
Butternut (Walnut, White)	2,100	14.5
Spruce	2,100	14.5
Willow	2,100	14.5
Fir, Balsam	2,236	14.3
Pine, White (Eastern, Western)	2,236	14.3
Fir, Concolor (White)	2,104	14.1
Basswood (Linden)	2,108	13.8
Buckeye, Ohio	1,984	13.8
Cottonwood	2,108	13.5
Cedar, White	1,913	12.2

Moisture content plays a key role in the performance of your stove. Wood freshly cut from a living tree (green wood) contains a great deal of moisture. You must season green wood before using it in your wood stove. To season green wood properly, split, stack, and allow it to air dry for a period of one year. Green wood may provide less than 2000 Btu per pound, whereas dry wood can provide up to 7000 Btu per pound.

Stack the firewood on skids or blocking to keep it off the ground, cover only the top of the stack. Plastic or tarps that cover the sides of the stack of wood trap moisture and prevent the wood from drying. As for stacking, an old Vermonter said, "The spaces between the logs should be large enough for a mouse to get through, but not for the cat that's chasing it."

- **DO NOT STORE FIREWOOD WITHIN THE STOVE'S SPECIFIED CLEARANCES TO COMBUSTIBLE MATERIALS.**

BUILDING A FIRE

Once you understand the controls of your wood stove and have chosen the appropriate firewood, you are ready to start a fire.

- **WARNING: NEVER USE GASOLINE, GASOLINE-TYPE LANTERN FUEL, KEROSENE, CHARCOAL LIGHTER FLUID, OR SIMILAR LIQUIDS TO START OR 'FRESHEN UP' A FIRE IN THIS HEATER. KEEP ALL SUCH LIQUIDS WELL AWAY FROM THE HEATER WHILE IT IS IN USE.**

Breaking In Your Wood Stove

It is imperative that your stove is "broken in" slowly. Soapstone requires "seasoning"; over-firing a new stove may cause soapstone to crack or may damage other stove parts. Moisture in the soapstone must be driven out slowly to minimize the "shock" to the stone of its first exposure to high firebox temperatures. In addition, the asbestos-free furnace cement must be cured slowly to ensure adequate sealing and bonding.

The bottom layer of soapstone in the firebox is intended to prevent thermal stress and should remain in place in the fire box at all times.

When you light your first fires, the wood stove will emit some smoke and fumes. This is normal "off-gassing" of the paints and oils used when manufacturing the wood stove. If you find it necessary, open a few windows to vent your room. The smoke and fumes will usually subside after 10 to 20 minutes of operation. The odor and smoke will end once the stove is "cured".

The first fires may produce other odors from impurities that exist in the area immediately surrounding the stove. Some of these impurities can be cleaning solvents, paint solvents, cigarettes, smoke, pet hair, dust, adhesives, a new carpet, and new textiles. These odors will dissipate over time. You can alleviate these odors by opening a few windows or otherwise creating additional ventilation around your stove. If any odor persists, contact your dealer or an authorized service technician.

If you adhere to the following break-in procedure, as well as all other operating procedures in this manual, the cast iron and soapstone components of your stove will give you many years of trouble-free use. With use, the color of the soapstone may change and small fractures may appear on the surface of the stone. These changes will only add character and distinction to your stove.

Avoid the following conditions that can cause the soapstone or cast iron pieces to break:

- Do not throw wood into the stove.
- Do not use the doors as leverage to force wood into the stove.
- Do not load wood that is encrusted with ice into a burning stove as the thermal shock can cause damage.
- Do not use a manufactured grate. Burn the fire directly on the soapstone that lines the bottom of the firebox.

Building A Break In Fire

1. Open the front or side door and place five or six double sheets of tightly twisted newspaper in the center of the firebox. Arrange kindling in a crisscross pattern over the newspaper. Kindling should be approximately ten pieces, 1/2" (13 mm) in diameter and 10" to 18" (254 mm to 457 mm) long.
2. Fully open the primary air control by pushing the control handle fully to the left, away from the firebox.
3. Light the paper under the kindling. Close the side door and leave the front door slightly ajar momentarily until the kindling has started to burn and draft begins to pull.
4. Close the door and allow the fire to burn. Keep both the front and side doors closed while the stove is in use. Make sure the grate is in the closed position and the ash drawer is tightly closed.
5. KEEP A WATCHFUL EYE ON YOUR STOVE to maintain a steady, low-heat fire. Your first fire should make the stove warm but **not hot to the touch**. At most, a few small chunks of wood should be added to the fire to reach safe break-in temperatures.
6. Once the stove is warm but **not hot to the touch,** close the primary air control by pushing it fully to the right to allow the fire to die out completely.
7. Let the stove return to room temperature.

Build and maintain your first fire and first fire each season thereafter as outlined above. Your patience will be rewarded by a properly seasoned stove.

- **NOTE:** Cool flue gas temperatures present during the break-in procedure may cause rapid creosote build-up. The glass may also get dirty. A good hot fire will clean it. We recommend a visual inspection (and cleaning if necessary) of your stovepipe and chimney once the break-in procedure is completed.

NORMAL OPERATION

If your stove is not used continuously or has not been used in quite some time, follow the break-in procedure at least once to minimize the stress of a hot fire on a cold stove before proceeding with normal operation. We recommend one break-in fire at the start of each heating season.

Prior to loading the stove, ensure the ash grate, refractory soapstone, and the ash pan are in place. Ensure the ash door is closed to prevent over-firing.

Also, ensure you clear away the ashes around the "doghouse." The doghouse is the slight bulge of metal, located in the front lower center of the firebox. If the front door is open, the doghouse is in the lower center of the door opening. There is a hole located on the opposite side, which directs primary air into the coal bed area of the firebox. Obstructing this hole will hinder the operation of the stove. Along with the glass' air wash, the air flow is regulated via the primary air control lever.

Building A Fire For Everyday Use

1. Open the front or side door and place five or six double sheets of tightly twisted newspaper in the center of the firebox. Arrange kindling in a crisscross pattern over the newspaper. Kindling should be approximately ten pieces, 1/2" (13 mm) in diameter and 10" to 18" (254 to 457 mm) long.
2. Fully open the primary air control by pushing it completely to the left, away from the firebox.
3. Light the paper under the kindling. Leave the front door slightly ajar momentarily until the kindling has started to burn and draft begins to pull.
4. Close the door and allow the fire to burn.
5. Once the kindling is burning, open the front or side door and add logs, small at first, to build the fire up. Make sure to keep the logs away from the glass in front in order for the air-wash system to work properly. Keep the front door and ash door closed while the stove is in use.
6. Once the fire is burning well, use the primary air control to regulate the desired rate of burn. Pushing the handle to the left opens the PRIMARY AIR CONTROL for a high rate of burn or pushing it to the right for a low rate of burn.

- **NOTE:** When opening the front or side door to reload or re-arrange logs, it is advisable to open the door just a crack, pause for a moment then open the door completely. This procedure will allow the firebox to clear of smoke before the door is opened fully. Also, reloading on a bed of hot, red coals reduces smoking time and will bring fresh fuel up to a high temperature rapidly.

Burn Rate

HIGH BURN: Fully load the firebox with wood on a bed of hot coals or on an actively flaming fire and fully open the primary air control by moving it fully to the left, away from the firebox. This will fully open the primary air shutter. A high burn rate is recommended once or twice a day to fully heat the stovepipe and chimney, which will help minimize creosote accumulation. Sustained top, center stone temperature should not exceed 600° Fahrenheit (316°C).

MEDIUM HIGH BURN: With the primary air control in the closed position, move the control handle slightly to the left.

MEDIUM LOW BURN: With the primary air control in the closed position, move the handle half way between the medium and low settings. A medium-low burn rate should be the typical setting and is preferable if the stove is to be left unattended.

LOW BURN: Close the primary air control by moving it fully to the right. A low burn rate over extended periods of time is not advisable as it may promote the accumulation of creosote. Inspect the venting system frequently if low burn rates are maintained consistently.

- **NOTE:** If equipped with the optional blower, the following settings are recommended:

<u>Low and Medium-Low Burn:</u> Run the blower on low for slower moving, but warmer air circulation. Turn the knob 'ON', and then continue turning the control knob clockwise until the blower is running at a low speed.

<u>Medium High and High Burn:</u> Run the blower on high for maximum circulation. The blower speed is at its highest setting when the control knob is first

turned to the “ON” position. Continue to turn the control knob clockwise to reduce the blower speed if desired. We recommended that you wait at least 30 minutes for the stove to warm up before running the blower.

Over-Fire Caution

Over-firing means the stove is operating at temperatures above normal temperatures reached during High Burns outlined in the *BURN RATE* section. Carefully avoid over-firing, as it will damage the stove. Symptoms of chronic over-firing can include warped components, short burn times, a roaring sound in the stove or stovepipe, and discoloration of the stovepipe. A properly installed stove using fuel and following operating procedures as outlined in this manual should not over-fire.

Excessive draft, inappropriate fuel, and operator error can cause over-firing. Correct an over-fire situation as follows:

EXCESSIVE DRAFT: Contact your dealer to have a draft reading taken. Any draft in excess of 0.1 wc requires a damper in the stovepipe. Some installations may require more than one damper.

INAPPROPRIATE FUEL: Do not burn coal, kiln dried lumber, wax logs or anything other than natural cordwood.

OPERATOR ERROR: Make sure all the gaskets are in good condition. Replace worn out or compressed gaskets. Do not burn the stove with the front, side, ash door, as well as the ash grate in the open position. **Damage done by over-firing is not covered by your warranty**.

Results of over-firing can include: warped or burned out internal parts, cracked stones, discolored or warped external parts, and damaged enamel. If you suspect that your stove is over-firing, contact your dealer immediately.

- **ANY SIGNS OF OVER-FIRING WILL VOID YOUR WARRANTY!**

REMOVAL AND DISPOSAL OF ASHES

Remove ashes when the stove is cold. Use protective fireplace gloves if the ash pan is warm. Exercise extreme caution when handling, storing or disposing of ashes.

The ash pan and ash pan access door are located under the ash lip. The ash pan collects ash from a firebox and allows you to conveniently remove the ash from your wood stove. Clear the firebox of ashes often, and do not allow them to build up more than 3 inches high. It is especially important to prevent ashes from building up around the ‘dog house’, or lower primary air inlet. Clear the firebox of ashes by sliding the ash grate towards the front door (see page 18), sifting the ashes across the grate into the ash pan, then returning the grate to its closed position. The ash pan is easy to remove and has a handle for convenient disposal of ashes. The back of the ash pan assembly is sloped upwards. Before removing the ash pan, push it (hard!) into the stove to force the pan up the slope, which kicks the ashes further into the pan.

Dump ashes from the ash pan directly into a **metal** container with a tight fitting lid. Do not place any other items or trash into the metal container. Do not pour water into the container. Replace the container’s lid and allow the ashes to cool. Never place the ash disposal container on a combustible surface or vinyl flooring, as the container could be **hot!**

Pending disposal, place the closed ash container on a noncombustible floor or on the ground, well away from all combustible materials, liquid fuels, or vehicles. Retain ashes in the closed container until all coals thoroughly cool.

If the ashes are disposed of by burial in soil or otherwise locally dispersed, they should be retained in the closed container until all cinders have thoroughly cooled.

NEVER place ashes in wooden or plastic containers, in trashcans with other trash, or in paper or plastic bags, no matter how long the fire has been out. Coals within a bed of ashes can remain hot for several days once removed from the firebox.

Maintenance

Monitoring Stove Temperatures

Monitor the stove temperatures with a stove thermometer (available from your dealer) placed on the top center stone of the stove. The thermometer could read as high as 500°F (260°C) on High Burn and 200-300°F (93-149°C) on low burn. Maintaining sustained temperatures in excess of 600°F (316°C) will cause the stones to crack and other damage to the stove.

DO NOT OVER-FIRE THE STOVE. (REFER TO PAGE 22).

CREOSOTE FORMATION AND NEED FOR REMOVAL

When wood is burned slowly, it produces tar and other organic vapors, which combine with expelled moisture to form creosote. These creosote vapors condense in the relatively cool chimney flue of a slow-burning fire. As a result, creosote residue accumulates on the flue lining. When ignited, this creosote makes an extremely hot fire, which may damage the chimney or even destroy the house.

To prevent the buildup of creosote:

1. Burn the stove with the primary air control fully open for 30 minutes daily to burn out creosote deposits from within the stove and the venting system.
2. After reloading with wood, burn the stove with the primary air control fully open for 20 to 30 minutes. This manner of operation ensures early engagement of the secondary combustion system which, when engaged, minimizes creosote buildup in the chimney.

The stovepipe connector and chimney should be inspected at least monthly during the heating season to determine if a creosote build-up has occurred. If a creosote residue greater than 1/4" (6 mm) has accumulated, it should be removed to reduce the risk of a chimney fire.

If your glass is remaining dirty, your operating temperatures are low. Therefore, there is a higher risk of creosote buildup.

The venting system must be inspected at the stove connection *and* at the chimney top. Cooler surfaces tend to build creosote deposits quicker, so it is important to check the chimney at the top (where it is coolest) as well as from the bottom near the stove.

Accumulated creosote should be removed with a cleaning brush specifically designed for the type of chimney in use. A certified chimney sweep should be used to perform this service. Contact your dealer for the name of a certified chimney sweep in your area (your dealer may be a certified sweep!).

It is also recommended that before each heating season the entire system be professionally inspected, cleaned and repaired, if necessary.

GASKETS

Gasket material should normally be replaced every two to three seasons, depending on stove use. If the door seal is loose, a new gasket will assure a tight seal and improved stove performance. Contact your dealer for a gasket kit (PN 90-58210) that includes instructions and gaskets for your stove.

The procedure for replacing gaskets on the glass is reviewed on page 24.

To replace door gaskets, first remove the old gaskets with a utility or putty knife. Clean all gasket channels with a wire brush. Apply gasket cement to the channels and push the new gasket into place without stretching the gasket material. The door should be shut immediately to fully press the gasket into place and assure a positive seal.

We require the use of the following gaskets (in kit 90-58210):

DOOR: 67" (170 cm) Length, 3/8" (9.5 mm) Diameter, Adhesive Black Tube

GLASS: 58" (140 cm) Length, 1/4" (.64 cm) Diameter, Low Density Black Tube

ASH DOOR: 35" (89 cm) Length, 3/8" (9.5 mm) Diameter, Low Density, Black Tube

SIDE DOOR: 46" (117 cm) Length, 3/8" (9.5 mm) Diameter, Low Density, Black Tube

GLASS

Do not operate the stove with a broken door glass. Do not abuse the front door by striking or slamming.

- **Important:** scratching or etching the glass will weaken the integrity of the glass. Do not use a razor blade, steel wool, or any other abrasive material to clean the glass. Use low alkaline content cleaners only.

The front door glass is a ceramic, shock-resistant glass, made specifically for use in woodstoves. Do

not use any replacement glass other than the ceramic glass manufactured and supplied for use in this woodstove. Replacement glass is available through your local dealer.

The door glass should be replaced immediately if broken or chipped. Contact your local dealer for a replacement glass kit (PN 90-58215), which is accompanied with instructions and everything needed for the repair. If you replace the glass yourself, wear work gloves and safety glasses.

The procedure for glass and glass gasket replacement is as follows:

1. Remove the door by opening it about 90° and lifting it straight up off the hinges with the hinge pins remaining in the door.
2. Place the door face down on a flat, smooth surface, other than the floor, with the handle hanging over an edge.
3. Apply penetrating oil to the screws in the glass retainer clips. Remove the screws to separate the glass from the door.
4. Carefully lift the damaged glass and/or old gasket from the doorframe and discard.
5. Peel the paper backing from the tape gasket. Apply the new gasket to the doorframe as illustrated.
6. Place the gasketed glass onto the door. Place a new clips and gasket squares around the glass, and over the screw holes in the clip.
7. Screw the glass retainer clips (8) back on the door.
8. Install the door.

Glass Cleaning

When necessary, clean the glass with low alkaline content commercial stove glass cleaners, which are available from your local dealer. Never attempt to clean the glass while the fire is burning or the glass is hot. Most deposits can be cleaned by following the instructions provided with the cleaner.

To clean heavier deposits, open the door and lift it straight up and off the stove with the hinge pins remaining in the door (take care to save hinge pins and washers for reuse). Lay the door face down on a workbench or table, with the handle hanging off an edge so it will lie flat. Apply the cleaner to the glass and allow it to soak for a few minutes.

By laying the door flat, it will allow the cleaner to penetrate rather than run off the surface of the glass. Wipe the cleaner off with a soft cloth, or plain black & white newsprint.

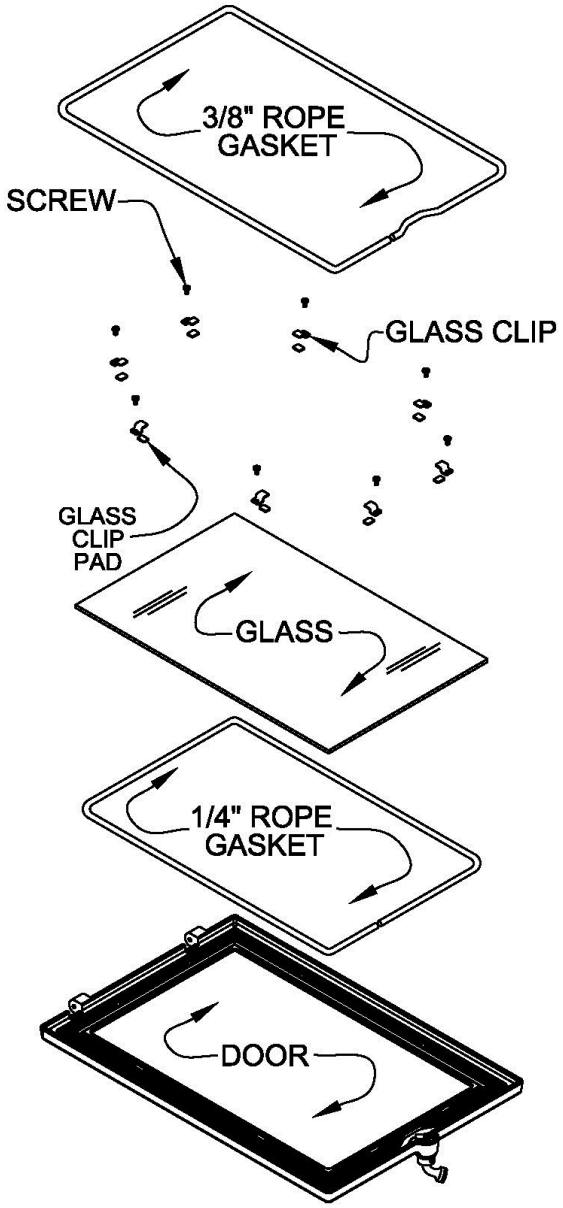

Figure 15 – Door and Glass Components Detail

STONE

Occasional cleaning is all that should be necessary to maintain the natural beauty of your stove's polished soapstone finish. Clean the soapstone with water, any non-abrasive cleaner and a soft cloth. Wipe dust from the stone with a clean cloth. Do not use chemical agents to wash the stone; do not use waxes or any polishing agents on the stone.

Take care to not scratch or chip the stone. Do not set items, which can stain, scratch or chip the stone (or enamel finish), on top of your stove.

Often, with use and over time, subtle earth tones of brown, red, and yellow appear on the soapstone. This is a natural reaction in the soapstone. Surface or hairline fractures may appear in the stone after a stove has been used. Such changes are normal and do not affect the operation or the integrity of the stove and do not require replacement. If you observe a completely broken stone, contact your dealer for service.

CAST IRON

Exterior cast iron parts are either painted with black, high-temperature stove paint or porcelainized with an enamel finish in various colors.

Use black, high-temperature stove paint (satin black by Stovebright®) to touch up and maintain the original appearance of painted cast iron. Use a damp sponge to wipe clean. Dry the cast iron thoroughly to prevent rusting.

Enamel castings can be cleaned with a standard glass cleaner. With time and use, a very fine, subtle network of crazed lines may appear seemingly beneath the surface of the enamel. Crazing is a natural predictable process and does not represent a flaw.

Troubleshooting

Virtually all woodstove operators experience basic common problems at one time or another. Most are correctable and generally require only a minor adjustment of the stove, installation, or operating technique. In cases where weather conditions dramatically affect stove performance, the problems are typically temporary and solve themselves once the weather changes.

If you question whether your stove is producing adequate heat, the best way to troubleshoot the problem is to monitor the temperature of the stack. A 400 degree F (200 degree C) stovepipe confirms the stove is supplying sufficient heat. Keep in mind that your house itself will regulate room/house temperatures. How well the walls, floors and ceilings are insulated, the number and size of glass windows, the tightness of outside doors, and the construction or style of your house (vaulted ceilings or other open spaces which collect large percentages of heat, ceiling fans, etc.) all are determining factors of room temperature.

Your stove's performance is also dependent on its installation. One common cause of poor performance is an oversized chimney flue. Oversized chimney flues result in decreased draft, which prevents the smoke from rising out the chimney. Oversized flues are also more difficult to heat effectively, especially when burning a high efficiency stove. Cool flue temperatures inhibit the establishment of a strong draft (and encourage the accumulation of creosote). The lack of a strong draft will cause the fire to die down and may even force the smoke to pour into the room.

If your chimney is the proper size and a strong draft is not easily established, there is the possibility of the chimney being too cold. Again, hot chimneys promote a stronger draft.

Other draft guidelines are as follows:

AN **"AIRTIGHT" HOUSE:** If your home is super-insulated or especially well sealed, the (infiltration) air supply to the interior of the house may be inadequate. This phenomenon of air starvation within the building can be exacerbated if exhaust fans, such as clothes dryers, bathroom fans or cookstove exhaust fans, are in operation within the home. Outfitting your stove with the optional outside air supply adaptor connected to an air duct which leads to the outside of the building should correct this problem.

TALL TREES OR BUILDINGS: These obstructions, when located in proximity to the top of the chimney can cause chronic or occasional downdrafts. When selecting a site for a new chimney, take care to consider the placement of other objects near the proposed chimney location.

WIND VELOCITY: Generally, the stronger and steadier a wind, the stronger (better) the draft. However, "gusty" wind conditions may cause erratic down-drafts.

BAROMETRIC PRESSURE: Chimney drafts are typically sluggish on balmy, wet or muggy days. This is a weather-related phenomenon, which generally is self-correcting as the weather changes.

BRISKNESS OF FIRE: The hotter the fire in your stove, the hotter your chimney and, therefore, the stronger the draft.

BREAKS IN THE VENTING SYSTEM: An unsealed clean-out door at the bottom of the chimney, leaky stovepipe joints, a poor stovepipe-to-thimble connection, missing caps, or a leaky chimney may cause inadequate draft.

SEASONAL FACTORS: Early fall and late spring are generally difficult seasons in which to establish proper drafts. The colder the outside air is (relative to room temperatures) the stronger the draft.

Operating the Stove:

There are days when a draft is not easily established. As outlined above, seasonal factors or a cold chimney may be the cause. Try starting the fire by using small kindling and fuel to obtain a quick, hot fire. Tend the fire frequently with small fuel until the chimney is hot and the draft is well established.

TROUBLESHOOTING GUIDE

PROBLEM	POSSIBLE CAUSE	SOLUTIONS
STOVE SMOKES	Operating Technique	Fully open the primary air control one minute before opening doors.
	Cold Chimney	Preheat the chimney when first starting a fire.
	Blocked Chimney	Examine the chimney and stovepipe for blockage or creosote accumulations.
	Oversized Chimney	Reline the chimney to the appropriate diameter
	Undersized Chimney	Install a draft inducer or replace the chimney.
	Chimney Too Short	Lengthen the chimney.
	Air Infiltration Into The Chimney	Seal chimney connections and openings in clean-out doors.
	More Than One Appliance Connected to the Flue	Disconnect all other appliances and seal openings.
BACK-PUFFING OR GAS EXPLOSIONS	Operating Technique	Fully open the primary air control one minute before opening the door and keep it fully open for a few minutes after reloading.
	Extra Low Burn Rate	Burn the stove at a higher burn rate.
	Chimney Down-draft	Install a chimney cap.
	Excessive Ash Build-up	Empty ash pan more frequently.
UNCONTROLLED OR SHORT BURN	Unsealed or Open Door	Close the door tightly or replace the gaskets.
	Open ash grate	Slide ash grate to closed position.
	Excessive Draft	Check the installation. Operate at LOW BURN. Install stovepipe damper.
	Deteriorated Cement Seals	Reseal the stove with furnace cement.
	Extra Long Chimney	Shorten the chimney. Install stovepipe damper.
	Oversized Chimney	Reline the chimney to the proper diameter.
	High Winds or Hilltop Location:	Install a chimney cap.
	Excessive Draft	Draft in excess of 0.1 wc should be corrected with a stovepipe damper
INSUFFICIENT HEAT	Poor Quality or Green Wood	Use only air-dried wood, preferably dried <u>at least</u> one year.
	Low Burn Rate	Operate the stove at a higher burn rate.
	Air Insulated Chimney	Replace with a pre-fabricated insulated chimney system or a properly sized masonry chimney.
	Cold Exterior Chimney	Reline or insulate the chimney.
	Leaky Stovepipe or Chimney	Check the installation.
	Too Much Heat Loss From House	Caulk windows, seal openings in home.
BLISTERING OF ENAMEL CASTING	Operating Technique	Do not over-fire the stove. Monitor stove temperatures. Use seasoned wood only.
	Excessive Draft	Check the DRAFT. A damper may be required. Operate the stove at a LOW BURN range.

Replacement Parts & Optional Accessories

PART #	DESCRIPTION
	CASTINGS
2010-225	BOTTOM: MATTE, HER
2010-230	LEG: SIDE,MATTE,HER
2010-422	PLATE; RIGHT SIDE
2010-270	DOOR: FRONT,MATTE,HER
2010-250	DOOR: SIDE,MATTE,HER
2010-252	PLATE: SIDE DOOR STONE RETAINING
2010-265	FRAME: DOOR,FRONT,OUTER,MAT,HER
2010-280	FRAME: BACK FLUE ,HER
2010-255	FRAME: DOOR,SIDE,OUTER,MATTE,HER
2010-257	FRAME: DOOR,SIDE,INNER,HER
2010-290	TOP: MATTE,HER
2010-282	BLANK PLATE: FLUE,HER
2010-285	COLLAR: FLUE,HER
2010-310	FOOT: CAS, HER1
2010-245	PRIMARY MANIFOLD,HER
2010-242	SECONDARY MANIFOLD TOP,HER
2010-240	SECONDARY MANIFOLD BOTTOM,HER
2010-275	SIDE TRIM ,HER
2010-220	DOOR: ASH PAN,HER
2010-215	ASH PAN FRAME ,HER 1
2010-227	GRATE: LOWER, ASH, HER 1
2010-228	GRATE: ASH,HER,
	STONE
000-101	STONE: SOAPSTONE,REFRACTORY
1141-251	STONE: POL,2-3/4"x9-1/2",FT/FB,MAN/HE
1141-252	STONE: POL,3-3/4"x9-1/2",FB/FT,MAN/HE
1141-253	STONE: POL,2-19/32"x9-1/2",SLOT,FS,HE
1201-25	STONE: POL,8"x9-1/2",4 BEVEL,RS/,HER/
1201-26	STONE: POL,8"x9-1/2",RC/RC/,MAN/HER/
1141-240	STONE: POL,4-5/32"x6-11/16",DT/,HER
1141-242	STONE: POL,2-7/8"x6-11/16",DB/HER
1421-56	STONE: POL,6-11/16"x9-1/2",S/,HER/HAR
1421-58	STONE: POL,8-1/32"x15-5/8",TS/,HER/HA
1141-261	STONE:POL,8-3/32"x8-1/32" TOP CEN.
1141-241	STONE: POL,8-3/8"X10-1/4" SIDE DOOR

PART #	DESCRIPTION
	STEEL
5021-030	HANDLE: SLIDER,PRI AIR CONTROL,HER
5021-025	PLATE: SLIDER,PRI AIR ,HER
5021-020	BRACKET:SLIDER RETAINER,PRI AIR,HER
5021-040	PIPE: AIR,SECONDARY,RISER,HER
5021-041	PIPE: AIR,SECONDARY,#1,HER
5021-042	PIPE: AIR,SECONDARY,#2,HER
5021-043	PIPE: AIR,SECONDARY,#3,HER
5570-150	HEAT SHIELD: UNDER TOP SS
5021-065	SUPPORT: BAFFLE,SS,HER
5021-055	PLATE: SIDE DOOR OUTTER FRAME
5021-010	PAN: ASH,HER
5021-035	CONTROL ROD,ASH GRATE,HER
5021-037	HANDLE: ASH GRATE CONTROL
	MISC.
6400-40444	OWNER'S MANUAL
90-58210	COMPLETE GASKET KIT
90-58215	FRONT DOOR GLASS KIT
90-71100	WOODEN HANDLE ASSEMBLY
90-73212	FRONT DOOR LATCH ASSEMBLY
90-73213	SIDE DOOR LATCH ASSEMBLY
90-73216	ASH PAN DOOR LATCH ASSEMBLY
90-76210	CERAMIC BAFFLE KIT
	OPTIONAL ACCESSORIES
90-53210	OUTSIDE AIR KIT
90-57210	BLOWER KIT
90-68210	REAR HEAT SHIELD
90-70210	SIDE DOOR LOCKING KIT

Safety & Rating Label

CONTACT YOUR LOCAL BUILDING OFFICIALS ABOUT RESTRICTIONS AND INSTALLATION INSPECTION IN YOUR AREA

Listed Room Heater, Solid Fuel Type
Also Suitable for Mobile Home Installation Pursuant to (UM)84-HUD

C US
Intertek

Intertek Testing Services NA, inc.

Manufactured by: hearthstone
317 Stafford Ave.
Morrisville VT 05661

SERIAL #

MODEL NAME:
HERITAGE 1 8021

WARNINGS

Do not use grate or elevate fire. Build wood fire directly on hearth.

Do not overfire. If the heater or chimney connector glows, you are overfiring.(See Manual)

OPERATE ONLY WITH DOORS CLOSED.

DO NOT OBSTRUCT SPACE UNDER HEATER.

TYPE OF FUEL: CORD WOOD ONLY

Conforms to UL Std. 1482
Certified to ULC Std. S627

"PREVENT HOUSE FIRES"

Install and use only in accordance with manufacturer's installation instructions and your local building codes.

CAUTION: Special methods are required when passing chimney through a wall or ceiling, refer to local building codes. Do not connect this unit to a chimney flue serving another appliance.

NOTE: Replace glass only with 5mm CERAMIC IR or NEOCERAM IR glass.

WARNING: (MOBILE HOME) An outside air inlet must be provided for combustion and be unrestricted while unit is in use.

Inspect and Clean Chimney Frequently-Under Certain Conditions of Use, Creosote Buildup May Occur Rapidly.

CAUTION: HOT WHILE IN OPERATION, DO NOT TOUCH. KEEP CHILDREN, CLOTHING, AND FURNITURE AWAY. CONTACT MAY CAUSE SKIN BURNS. SEE NAMEPLATE AND INSTRUCTIONS

Minimum Clearance to Combustible Materials*

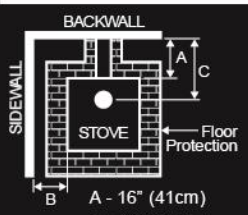

A - 16" (41cm)
B - 17" (43cm)
C - 17½" (45cm)

When installed on a combustible floor, non-combustible floor protection is required to cover the area beneath the heater, and extend at least 16" to the front and 8" beyond each side of the fuel loading and ash removal openings, the floor protection must extend under the flue connector and extend 2" beyond each side of the pipe.

VENT REQUIREMENTS: 6" diameter, single wall, minimum 24 MSG blue steel connector with listed factory-built Type HT chimney or masonry chimney.

* Refer to the Installation Manual for additional Clearance information, Installation Instructions, and Operating Instructions.

OPTIONAL COMPONENTS:

Outside Air Kit	Part #90-53210
Blower Kit	Part #90-57210
Rear Heat Shield	Part #90-68210
Side Door Locking Kit	Part #90-70210

U.S. ENVIRONMENTAL PROTECTION AGENCY
Certified to comply with July 1, 1990 particulate emissions standards

Date of Manufacture

2013 2014 2015 Jan Feb Mar Apr May Jun Jul Aug Sep Oct Nov Dec

DO NOT REMOVE OR COVER THIS LABEL

MADE IN USA

3300-664 r0

WARRANTY REGISTRATION

The Original Purchaser can complete their warranty registration on our website at www.hearthstonestoves.com/customer-resources/warranty-registration

Hearthstone Quality Home Heating Products, Inc.
Warranty Department
317 Stafford Avenue
Morrisville, VT 05661

- **NOTE: COMPLETING THE WARRANTY REGISTRATION FORM IS *NOT REQUIRED* AS A CONDITION OF WARRANTY COVERAGE OR HEARTHSTONE'S PERFORMANCE.**